Section F – INLET & OUTLET PROTECTION

March 2003

18.0 STANDARDS AND SPECIFICATIONS

FOR

RIP-RAP INFLOW PROTECTION

Definition

A temporary or permanent, lined drainageway installed to convey concentrated runoff into sediment traps and basins or down steep slopes as applicable. Rip-rap Inflow Protection consists of the installation of rock or recycled concrete equivalent in a flow channel for stabilization.

Purpose

The purpose of Rip-rap Inflow Protection is to provide stable conveyance of concentrated runoff down steep slopes, (i.e. into temporary sediment traps and basins) thereby preventing erosion of the flow channel.

Conditions Where Practice Applies

Rip-rap Inflow Protection is required where the slope of a drainage way contributing to a sediment trap or basin exceeds 10: 1 but is less than 4: 1. Runoff may be directed to the inflow device by means of dikes or swales.

Design Criteria

Rip-rap Inflow protection shall be 4” - 12" rip-rap (min.), underlain with Geotextile Class SE[17] and placed from the ditch overfall elevation to the bottom of the trap or basin when the inflow slope is between 4:1 and 10:1. Slopes flatter than 10:1 shall be stabilized in accordance with Temporary Swale or Earth Dike criteria as applicable. For slopes steeper than 4:1, see Gabion Inflow Protection.

Construction Specifications

1. Rip-rap Inflow Protection shall be 1' in depth, have a trapezoidal cross section with 2: l or flatter side slopes and a 3' minimum bottom width. The channel shall be lined with 4" - 12" rip-rap or ASHTO Class I[18] to a depth of 18".

[17] Refer to Table 44 (located on page L-53-1)
[18] Refer to Table 45 (located on page L-53-2)

2. Filter cloth shall be installed under all rip-rap. Filter cloth shall be Geotextile Class SE.
3. Entrance and exit sections shall be installed as shown on the detail section.
4. Rip-rap used for the lining may be recycled for permanent outlet protection if the basin is to be converted to a stormwater management facility.
5. Gabion Inflow Protection may be substituted for Rip-rap Inflow Protection.
6. Rip-rap should blend into existing ground.
7. Rip-rap Inflow Protection shall be used where the slope is between 4:1 and 10:1. For slopes flatter than 10:1 use Earth Dike or Temporary Swale.

DETAIL 26 - RIP-RAP INFLOW PROTECTION

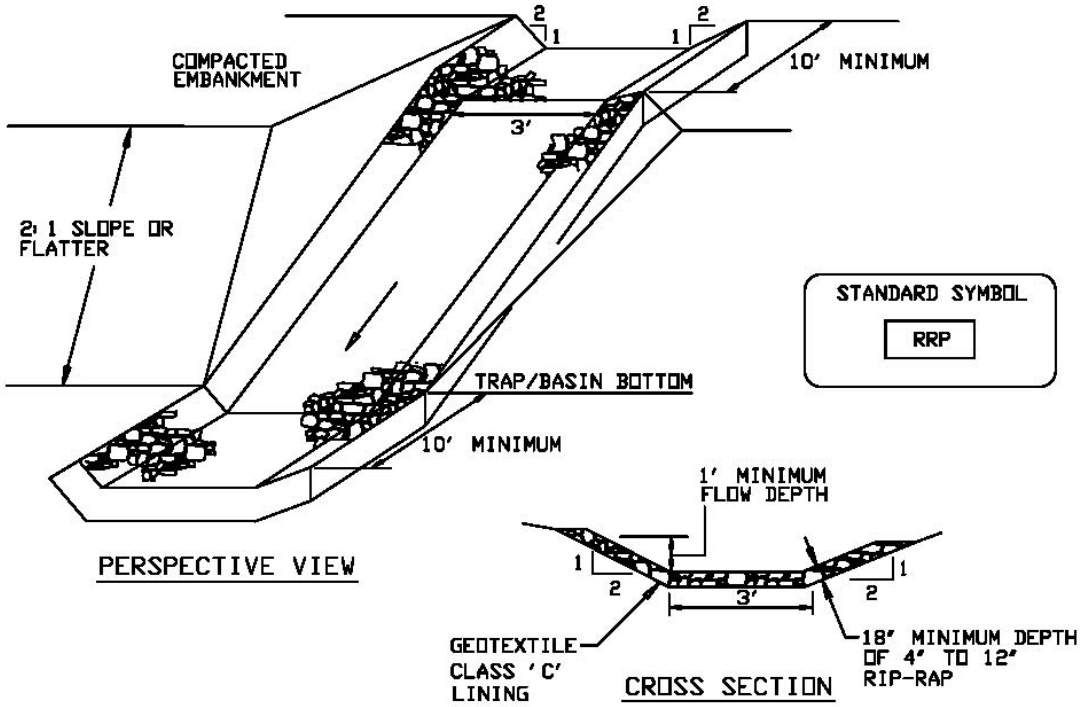

Construction Specifications

1. Rip-rap lined inflow channels shall be 1' in depth, have a trapezoidal cross section with 2:1 or flatter side slopes and 3' (min.) bottom width. The channel shall be lined with 4" to 12" rip- rap to a depth of 18".

2. Filter cloth shall be installed under all rip-rap. Filter cloth shall be Geotextile Class C.

3. Entrance and exit sections shall be installed as shown on the detail section.

4. Rip-rap used for the lining may be recycled for permanent outlet protection if the basin is to be converted to a stormwater management facility.

5. Gabion Inflow Protection may be used in lieu of Rip-rap Inflow Protection.

6. Rip-rap should blend into existing ground.

7. Rip-rap Inflow Protection shall be used where the slope is between 4:1 and 10:1, for slopes flatter than 10:1 use Earth Dike or Temporary Swale lining criteria.

U.S. DEPARTMENT OF AGRICULTURE NATURAL RESOURCE CONSERVATION SERVICE	PAGE F - 19 - 13	WATERSHED PROTECTION DIVISION DISTRICT OF COLUMBIA DEPARTMENT OF HEALTH

19.0 STANDARDS AND SPECIFICATIONS

FOR

GABION INFLOW PROTECTION

Definition

A temporary or permanent, lined drainageway installed to convey concentrated runoff into sediment traps and basins or down steep slopes as applicable. Gabion Inflow Protection consists of the installation of wire baskets (Gabions) filled with rock or recycled concrete equivalent in a flow channel for stabilization.

Purpose

The purpose of Gabion Inflow Protection is to provide stable conveyance of concentrated runoff down steep slopes, (i.e. into temporary sediment traps and basins) thereby preventing erosion of the flow channel.

Conditions Where Practice Applies

Gabion Inflow Protection is required where the slope of a drainage way contributing to a sediment trap or basin, or other steep area as applicable, exceeds 4:1 (25%). Surface runoff may be directed to the inflow device by means of dikes or swales.

Design Criteria

Gabion Inflow Protection shall be 4"- 7" stone[19] (min.) placed within manufactured wire baskets, underlain with Geotextile Class SE[20] and placed from the ditch overfall elevation to the bottom of the trap or basin when the inflow slope is between 2:1 and 4:1. Slopes flatter than 10:1 shall be stabilized in accordance with Temporary Swale or Earth Dike criteria as applicable. For slopes between 4:1 and 10:1, see Rip-rap Inflow Protection.

Construction Specifications

1. Gabion Inflow Protection shall be constructed by arranging 9'x 3' x 12" gabion baskets forming a trapezoidal cross section l' deep with 2:1 side slopes and 3' bottom width.
2. Geotextile Class SE shall be installed under all gabion baskets.

[19] See Table 45 (located on page L-53-2)
[20] Refer to Table 44 (located on page L-53-1)

3. The stone used to fill the gabion baskets shall be 4" - 7".
4. Gabion shall be installed in accordance with manufacturer's recommendations.
5. Gabion Inflow Protection shall be used where concentrated flow is present on slopes steeper than 4:1.

DETAIL 27 - GABION INFLOW PROTECTION

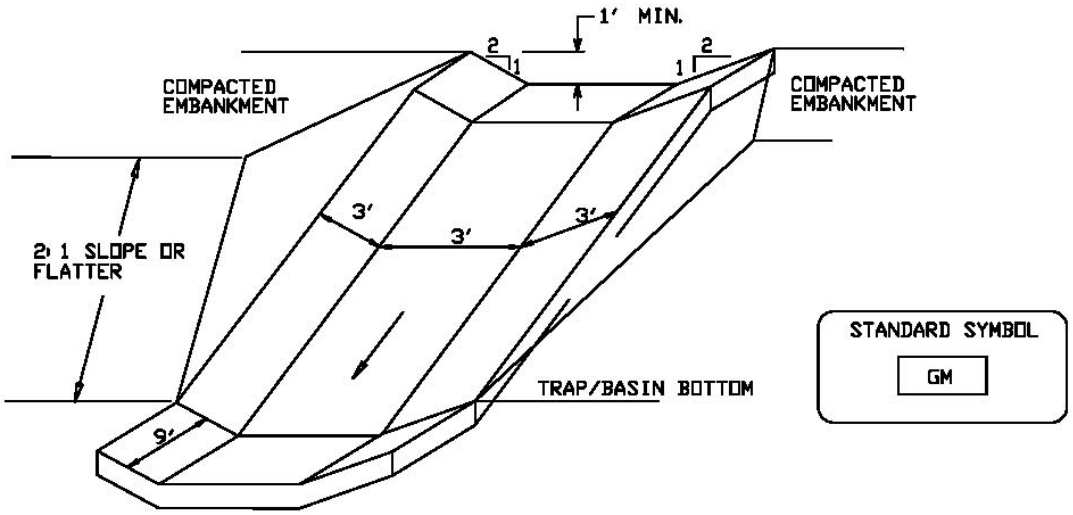

PERSPECTIVE VIEW

STANDARD SYMBOL

GM

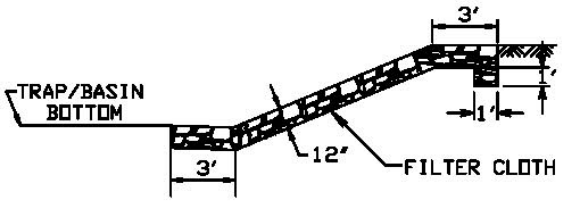

PROFILE ALONG CENTERLINE

Construction Specifications

1. Gabion inflow protection shall be constructed of 9' x 3' x 9" gabion baskets forming a trapezoidal cross section 1' deep, with 2:1 side slopes, and a 3' bottom width.
2. Geotextile Class C shall be installed under all gabion baskets.
3. The stone used to fill the gabion baskets shall be 4" - 7".
4. Gabions shall be installed in accordance with manufacturers recommendations.
5. Gabion Inflow Protection shall be used where concentrated flow is present on slopes steeper than 4:1.

U.S. DEPARTMENT OF AGRICULTURE NATURAL RESOURCE CONSERVATION SERVICE	PAGE F - 20 - 13	WATERSHED PROTECTION DIVISION DISTRICT OF COLUMBIA DEPARTMENT OF HEALTH

20.0 STANDARDS AND SPECIFICATIONS

FOR

STONE CHECK DAMS

Description of Practice

Stone Check Dams are stone weirs placed in series in swales or ditches.

Purpose

Stone Check Dams are constructed to reduce runoff velocities to non-erosive rates and to prevent channel erosion in drainage courses.

Design Criteria

1. Stone check dams shall be located so as to provide maximum velocity reduction. This may be achieved by considering the volume of runoff, the drainage area and the slope. The check dams should be placed in reasonably straight ditch sections to minimize the potential for erosion in the channel bend. All stone check dams should be keyed into the sides and bottom of the channel. **This practice is not to be used as a sediment trapping device.** Sediment laden runoff must pass through a sediment trapping device prior to being discharged from the site.

2. The distance between the Stone Check Dams will vary with the longitudinal ditch slope. Stone Check Dams shall be constructed using 4"- 7" stone[21] or recycled concrete equivalent and shall be placed to form a weir. The outlet crest or the top of the stone weir shall be approximately 6" lower than the outer edges.
   The inside or upstream side of the weir shall be lined with a 1' thick layer of washed (3/4" to 1 1/2") crushed aggregate. Geotextile Class E[22] or better under the bottom and sides of the dam prior to placement of stone is optional.

3. The height of the stone outlet weir should not exceed one-half the depth of the ditch or swale. Additionally, the maximum height of the weir must not exceed 2.0 feet to prevent scour of the toe of the dam. If the check dam exceeds this, these provisions do not apply and an engineering analysis should be conducted. The stone check dam should be wide enough to reach from bank to bank of the ditch or swale with the weir section length in the center of the dam.

[21] Refer to Table 45 (located on page L-53-2)
[22] Refer to Table 44 (located on page L-53-1)

4. The number of check dams will depend on the length and slope of the ditch or swale.

5. The required spacing is determined as:

$$x = y/S$$

where:

x = Check dam spacing (ft)
y = Check dam height (ft)
S = Natural channel slope (ft/ft)

Figure 2 may be used to determine the check dam spacing. The spacing requirements do not change significantly with varying ditch cross sections, but are most sensitive to the channel slope and height of the check dam.

Construction Specifications

1. Swales and ditches shall be prepared in accordance with the construction specifications described in C-11, Standards and Specifications for Temporary Swales.
2. The check dam shall be constructed of 4" to 7" stone. The stone shall be placed so that it completely covers the width of the channel and keyed into the channel banks.
3. The top of the check dam shall be constructed so that the center is approximately 6 inches lower than the outer edges, forming a weir that water can flow across.
4. The maximum height of the check dam at the center shall not exceed 2'.
5. The upstream side of the check dam shall be lined with approximately 1' of 3/4" – 1 1/2" aggregate.
6. Accumulated sediment shall be removed when it has built up to 1/2 of the original height of the weir crest.

Sediment Removal

While this practice is not intended to be used for sediment trapping, some sediment will accumulate behind the check dam. Check dams should be inspected periodically and after each significant rainfall. Accumulated sediment should be removed when it has reached 1/2 of the original height of the weir crest.

Check Dam Removal

In temporary swales and channels, check dams should be removed and the ditch filled in when it is no longer needed. In permanent channel structures, check dams may be removed when a permanent lining can be installed. In the case of grass lined ditches,

check dams may be removed when the grass has matured sufficiently to protect the swale or channel. The area beneath the check dams should be seeded and mulched immediately after they are removed.

DETAIL 28 - STONE CHECK DAM

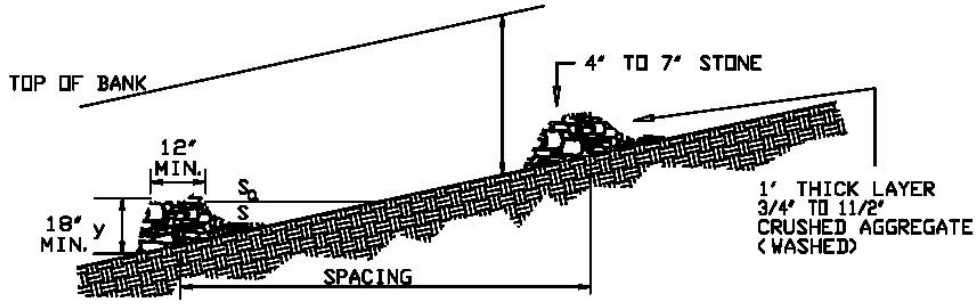

DITCH PROFILE

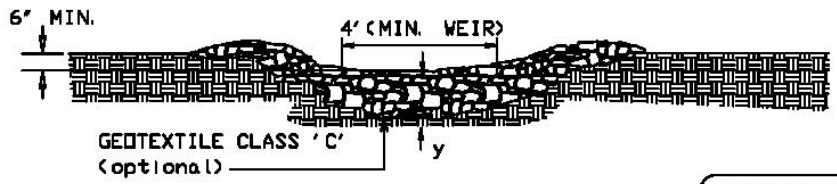

CROSS SECTION

STANDARD SYMBOL

STANDARD STONE CHECK DAM DESIGN

SLOPE	SPACING
2% or less	80'
2.1% to 4%	40'
4.1% to 7%	25'
7.1% to 10%	15'
over 10%	use lined waterway design

Construction Specifications

1. Swales and ditches shall be prepared in accordance with the construction specifications described in Section A-2, Standards and Specifications for Temporary Swale.

2. The check dam shall be constructed of 4"-7" stone. The stone shall be placed so that it completely covers the width of the channel and keyed into the channel banks.

3. The top of the check dam shall be constructed so the the center is approximately 6" lower than the outer edges, forming a weir that water can flow across.

4. The maximum height of the check dam at the center shall not exced 2".

5. The upstream sideof the check dam shall be lined with approximately 1" of 3/4" to 11/2" crushed aggregate.

U.S. DEPARTMENT OF AGRICULTURE NATURAL RESOURCE CONSERVATION SERVICE	PAGE F - 21 - 4	WATERSHED PROTECTION DIVISION DISTRICT OF COLUMBIA DEPARTMENT OF HEALTH

FIGURE 2

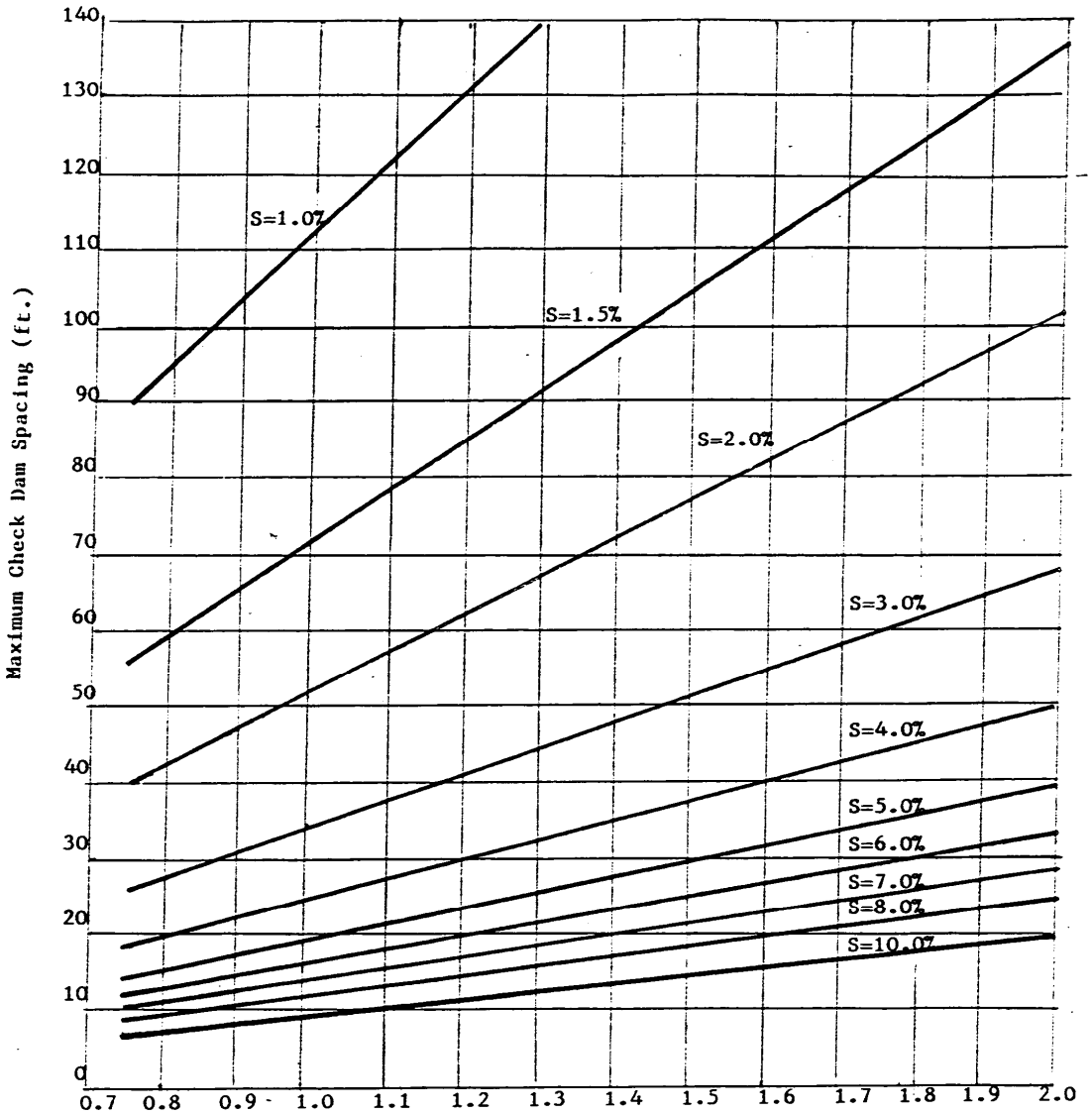

Check Dam Height (ft.)

Design of Stone Check Dam Spacing
(n=0.030, Ve = 2.0 fps)

21.0 STANDARDS AND SPECIFICATIONS

FOR

STONE OUTLET STRUCTURES

Definition

A temporary stone dike installed in conjunction with and as a part of an earth dike.

Purpose

The purpose of the Stone Outlet Structure is to filter sediment laden runoff, provide a protected outlet for an earth dike, provide for diffusion of concentrated flow, and allow the area behind the dike to dewater and filter sediment laden runoff.

Conditions Where Practice Applies

Stone outlet structures apply to any point of discharge where there is need to dispose of runoff at a protected outlet or to diffuse concentrated flow for the duration of the period of construction. **The drainage area to this practice shall be 1/2 acre or less, for larger areas a trap shall be used.**

Outlet

The stone outlet structure shall be located so as to discharge onto an already stabilized area or into a stable watercourse. Stabilization shall consist of complete vegetative cover, paving, etc., sufficiently established to be erosion resistant.

Construction Specifications

1. 2" to 3" stone[23] or recycled concrete equivalent is preferred but clean gravel may be used if stone is not available.

2. The crest of the stone dike shall be at least 6" lower than the lowest elevation of the top of the earth dike and shall be level.

3. The stone outlet structure shall be embedded into the soil a minimum of 4".

4. The minimum length of the crest of the stone outlet structure shall be 6'.

[23] Refer to Table 45 (located on page L-53-2)

5. The baffle board shall extend 1' into the dike and 4" into the ground and be staked in place.

6. The drainage area to this structure shall be less than 1/2 acre.

DETAIL 29 - STONE OUTLET STRUCTURE

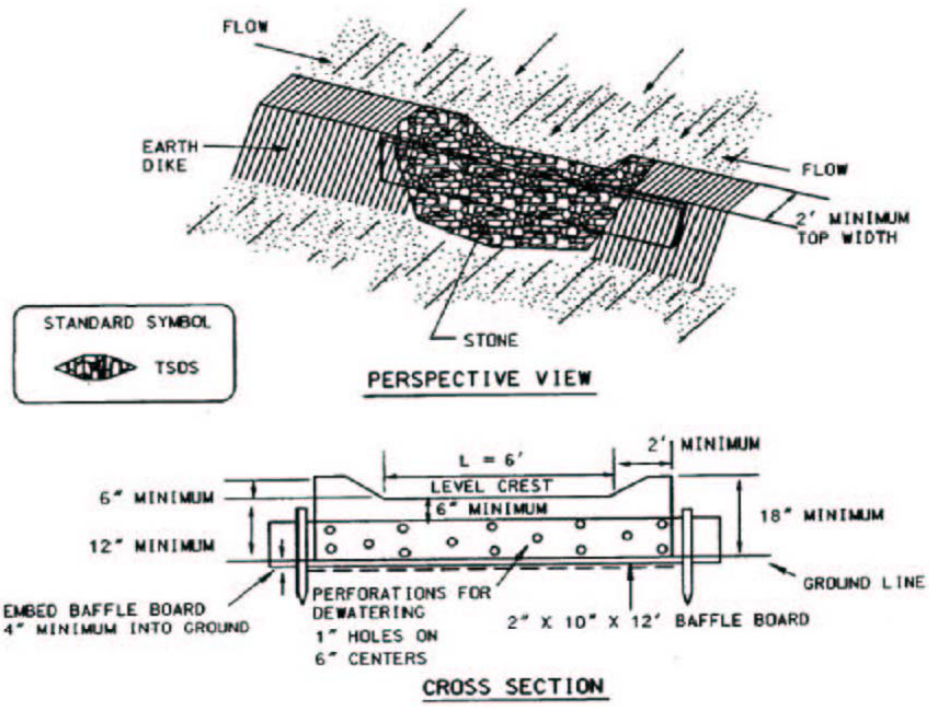

Construction Specifications

1. Crushed stone shall be used. Gravel may be used if crushed stone is not available. The stone shall be 2"-3" in size.

2. The crest of the stone dike shall be at least 6" lower than the lowest elevation of the top of the earth dike and shall be level.

3. The stone outlet structure shall be embedded into the soil a minimum of 4".

4. The minimum length of the crest of the stone outlet structure shall be 6'.

5. The stone outlet structure shall be inspected after each rain. Stone shall be replaced when the structure ceases to function and ponding results.

6. The baffle board shall be extended one foot into the dike, staked and embedded 4" into the existing ground.

7. The drainage area to this structure shall be less than ½ acre.

U.S. DEPARTMENT OF AGRICULTURE NATURAL RESOURCE CONSERVATION SERVICE	PAGE F - 22 - 3	WATERSHED PROTECTION DIVISION DISTRICT OF COLUMBIA DEPARTMENT OF HEALTH

22.0 STANDARDS AND SPECIFICATIONS

FOR

ROCK OUTLET PROTECTION

Definition

Rock placed at the outfall of channels or culverts.

Purpose

To reduce the velocity of flow in the receiving channel to non-erosive rates.

Conditions Where Practice Applies

This practice applies where discharge velocities and energies at the outlets of culverts are sufficient to erode the next downstream reach. This applies to outlets of all types such as sediment basins, stormwater management ponds, and road culverts.

Design Criteria

The design method presented here applies to sizing rock rip-rap and gabions to protect a downstream area. It does not apply to rock lining of channels or streams. The design of rock outlet protection depends entirely on the location. Pipe outlets at the top of cuts or on slopes steeper than ten percent cannot be protected by rock aprons or rip-rap sections due to reconcentration of flows and high velocities encountered after the flow leaves the apron.

Be aware that many counties and state agencies have regulations and design procedures established for dimensions, type and size of materials, and locations where outlet protection is required.

1. Tailwater Depth

   The depth of tailwater immediately below the pipe outlet must be determined for the design capacity of the pipe. If the tailwater depth is less than half the diameter of the outlet pipe and the receiving stream is wide enough to accept divergence of the flow, it shall be classified as a Minimum Tailwater Condition. If the tailwater depth is greater than half the pipe diameter and the receiving stream will continue to confine the flow, it shall be classified as a Maximum Tailwater Condition. Pipes which outlet onto flat areas with no defined channel may be assumed to have Minimum Tailwater Condition.

2. Apron Size

The apron length and width shall be determined from the curves according to the tailwater condition:

Minimum Tailwater	Use Table 21
Maximum Tailwater	Use Table 22

If the pipe discharges directly into a well-defined channel, the apron shall extend across the channel bottom and up the channel banks to an elevation one foot above the maximum tailwater depth or to the top of the bank, whichever is less. Where no headwall is used the upstream end of the apron adjacent to the pipe shall have a width two times the diameter of the outlet pipe where an end section is used, the upstream end of the apron shall conform to the end section.

3. Bottom Grade

The outlet protection apron shall be constructed with no slope along its length. There shall be no obstruction at the end of the apron. The elevation of the downstream end of the apron shall be equal to the elevation of the receiving channel or adjacent ground.

4. Alignment

The outlet protection apron shall be located so that there are no bends in the horizontal alignment.

5. Materials

The outlet protection may be done using rock rip-rap, or gabions. Rip-rap shall be composed of a well-graded mixture of stone sized so that fifty (50) percent of the pieces, by weight, shall be larger than the size determined by using the charts. The minimum d_{50} size to be used shall be nine (9) inches. A well-graded mixture as used herein is defined as a mixture composed primarily of larger stone sizes but with a sufficient mixture of other sizes to fill the smaller voids between the stones. The diameter of the largest stone in such a mixture shall be 2.0 times the size selected on the chart located in the following paragraph.

6. Thickness

Rip-rap specifications the following values are used:

Table 20: Rip-rap Sizes and Thicknesses

	D_{50}	D_{100}	Thickness
Class I	9.5"	15"	19"
Class II	16"	24"	32"
Class III	23"	34"	46"

7. Stone Quality

Stone for rip-rap shall consist of field stone or rough and hewn quarry stone. The stone shall be hard and angular and of a quality that will not disintegrate on exposure to water or weathering. The specific gravity of the individual stones shall be at least 2.5. Recycled concrete equivalent may be used provided it has a density of at least 150 pounds per cubic foot and does not have any exposed steel or reinforcing bars.

8. Filter

A filter is a layer of material placed between the rip-rap and the underlaying soil surface to prevent soil movement into and through the rip-rap to prevent piping, reduce uplift pressure, and collect water. Rip-rap shall have a filter placed under it in all cases. A filter can be of two general forms: a gravel layer or a Geotextile Class SE[24].

9. Gabions

Gabion baskets may be used as rock outlet protection, provided they are made of hexagonal triple twist mesh with heavily galvanized steel wire. The maximum lined dimension of the mesh opening shall not exceed 4 1/2 inches. The area of the mesh opening shall not exceed ten (10) square inches. Gabions shall be fabricated in such a manner that the sides, ends, and lid can be assembled at the construction site into a rectangular basket of the specified sizes. Gabions shall be of single unit construction and shall be installed according to the manufacturer's specifications. The area on which the gabion is to be installed shall be graded as shown on the drawings. Foundation conditions shall be the same as for placing rock rip-rap. Geotextile Class SE shall be placed under all gabions. Gabions must be keyed in to prevent undermining of the main gabion structure. Refer to Table 45 for Gabion stone sizes.

[24] Refer to Table 44 (located on page L-53-1)

Maintenance

Once a rip-rap outlet has been installed, the maintenance needs are very low. It should be inspected after high flows to see if scour beneath the rip-rap has occurred or if any stones have been dislodged. Repairs should be made immediately.

Design Procedure

1. Investigate the downstream channel to assure that non-erosive velocities can be maintained.

2. Determine the tailwater condition at the outlet to establish which curve to use.

3. Enter the appropriate chart with the depth of flow and discharge velocity to determine the rip-rap size and apron length required. References to pipe diameters in the charts are based on full flow. For other than full pipe flow, the parameters of depth of flow and velocity must be used.

4. Calculate apron width at the downstream end if a flared section is to be employed.

Examples

Example 1: Pipe Flow (Full) with Discharge to Unconfined Section:

Q = 280 cfs, diameter = 66", tail water is 2' above pipe invert (min. tailwater condition).

Read d_{50} = 1.2 feet, and apron length = 38 feet.

Apron width = diameter + L a = 5.5 + 38 = 43.5 feet.

Example 2: Box Flow (Partial) with High Tailwater:

A box culvert is flowing under partial flow conditions:

A concrete box 5.5 feet x 10 feet is flowing 5.0 deep; Q = 600 cfs, and tailwater (surface) is 5' above invert (maximum tailwater condition);

V = Q/A = 600/(5 x 10) = 12 fps

At the intersection of the curve, d = (60) inches, V = 12 fps, read d_{50} = 0.4 feet. Since d_{50} 9 inches, use d_{50} = 9 inches.

Then reading to the d = (60) inch curve, read apron length = 40 feet.

Apron width, W = conduit width + 0.04 L a = 10 + (0.4)(40) = 26 feet.

Example 3: Open Channel Flow with Discharge to Unconfined Section:

A trapezoidal concrete channel 5 feet wide with 2: 1 side slopes is flowing 2 feet deep;

Q = 180 cfs (velocity = 10 fps); and the tailwater (surface) downstream is 0.8 foot (minimum tail water condition).

At the intersection of the curve, d = 24 inches, V = 10 fps, read d_{50}= 0.7 feet. Since d_{50} 9 inches, use d_{50} = 9 inches.

Then reading to the d = 24 inch curve, read apron length = 22 feet.
Apron width, W = bottom of width of channel + L a = 5 + 22 = 27 feet.

Example 4: Pipe Flow (Partial) with Discharge to a Confined Section:

A 48-inch pipe is discharging with a depth of 3 feet;

Q = 100 cfs and the discharge velocity of 10 fps (established from partial flow analysis) to a confined trapezoidal channel with a 2 foot bottom, 2:1 side slopes, n = .04, and a grade of 0.6 %.

Calculation of the downstream channel (Manning's Equation) indicates a normal depth of 3.1 feet and a normal velocity of 3.0 fps. Since the receiving channel is confined, the maximum tailwater condition controls.

At the intersection of the curve, d = 36 inches, and V = 10 fps, read d_{50} = 0.3 feet.

Since d_{50} 9 inches, use d_{50}= 9 inches.

Then reading to the d = 36 inch curve, read apron length = 30 feet.

Since the maximum flow depth in this reach is 3.1 feet, then the minimum depth of the riprap must be 4.1 feet.

Construction Specifications

1. The subgrade for the filter, rip-rap, or gabion shall be prepared to the required lines and grades. Any fill required in the subgrade shall be compacted to a density of approximately that of the surrounding undisturbed material.

2. The rock or gravel shall conform to the specified grading limits when installed respectively in the rip-rap or filter.

3. Geotextile Class SE[25] or better shall be protected from punching, cutting, or tearing. Any damage other than an occasional small hole shall be repaired by placing another piece of geotextile fabric over the damaged part or by completely replacing the geotextile fabric. All overlaps whether for repairs or for joining two pieces of geotextile fabric shall be a minimum of one foot.

4. Stone for the rip-rap or gabion outlets may be placed by equipment. They shall be constructed to the full course thickness in one operation and in such a manner as to avoid displacement of underlying materials. The stone for rip-rap or gabion outlets shall be delivered and placed in a manner that will ensure that it is reasonably homogenous with the smaller stones and spalls filling the voids between the larger stones. Rip-rap shall be placed in a manner to prevent damage to the filter blanket or geotextile fabric. Hand placement will be required to the extent necessary to prevent damage to the permanent works.

5. The stone shall be placed so that it blends in with the existing ground. If the stone is placed too high then the flow will be forced out of the channel and scour adjacent to the stone will occur.

[25] Refer to Table 44 (located on page L-53-1)

Table 21

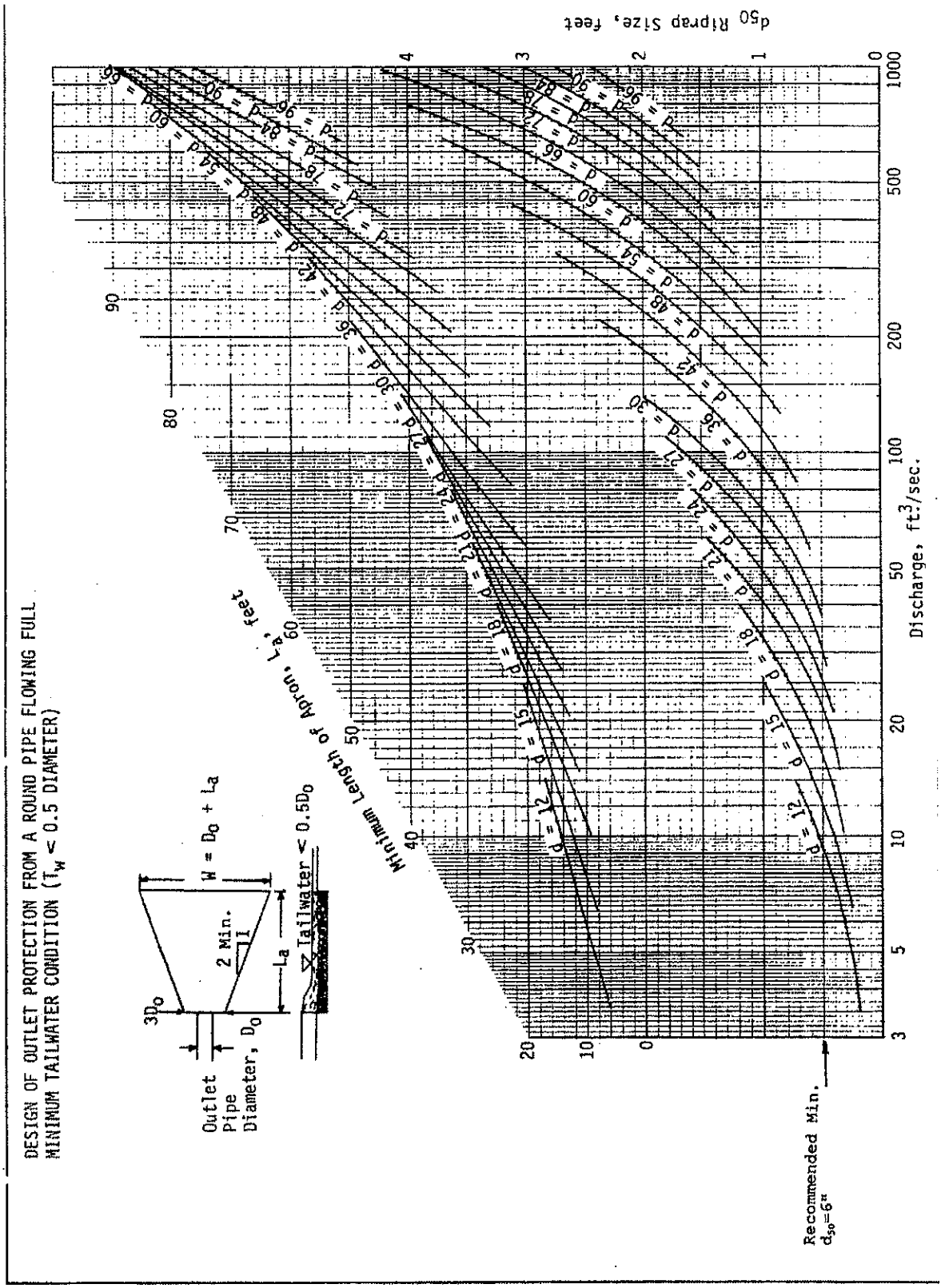
DESIGN OF OUTLET PROTECTION FROM A ROUND PIPE FLOWING FULL
MINIMUM TAILWATER CONDITION (T_w < 0.5 DIAMETER)
Outlet Pipe Diameter, D_o
$3D_o$
2 Min.
1
$W = D_o + L_a$
L_a
Tailwater < $0.5D_o$
Minimum Length of Apron, L_a, feet
Discharge, ft^3/sec.
d_{50} Riprap Size, feet
Recommended Min. $d_{50} = 6''$

Table 22

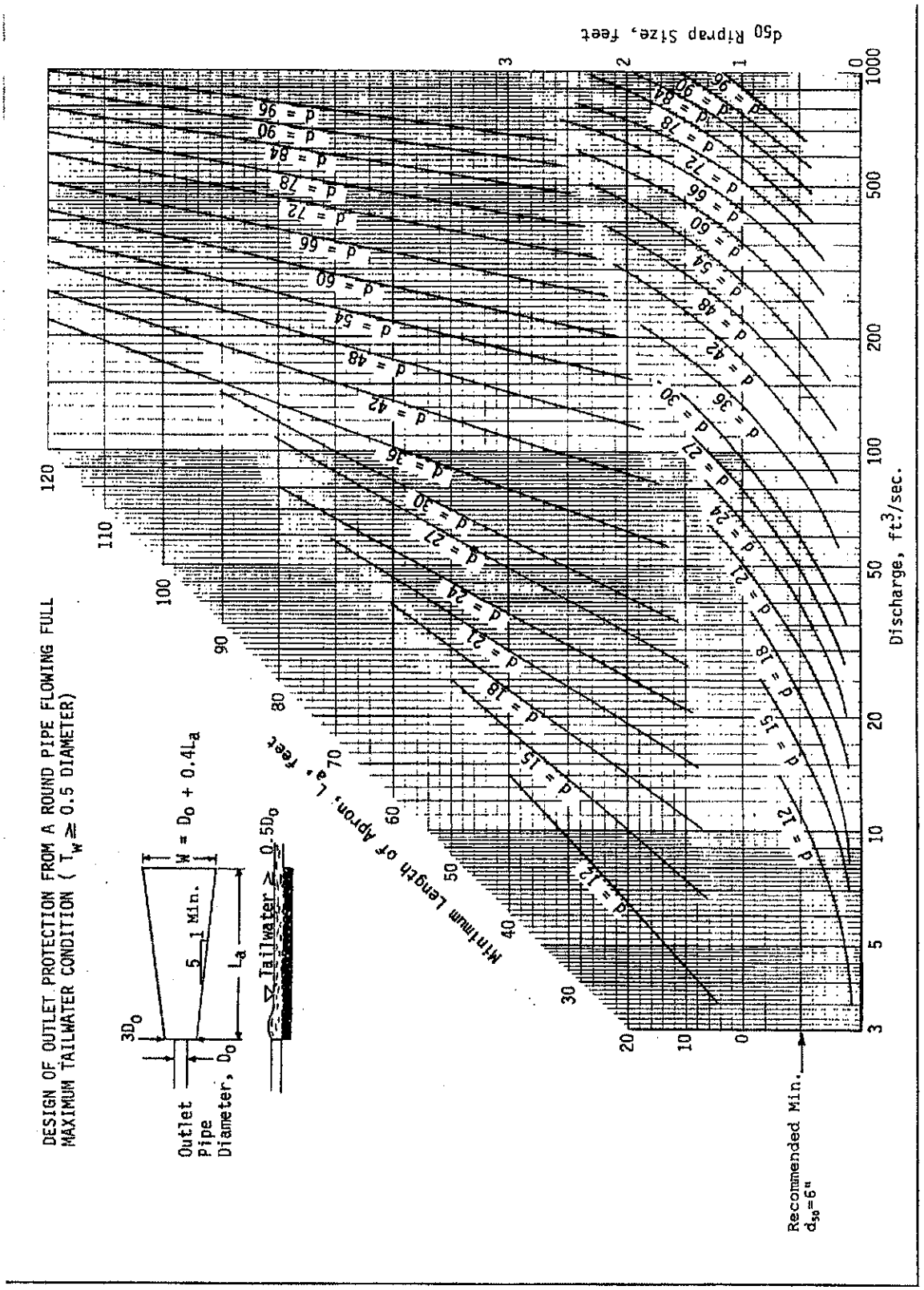
DESIGN OF OUTLET PROTECTION FROM A ROUND PIPE FLOWING FULL
MAXIMUM TAILWATER CONDITION ($T_w \geq 0.5$ DIAMETER)
Outlet Pipe Diameter, D_o
$3D_o$
5
1 Min.
$W = D_o + 0.4L_a$
L_a
Tailwater $\geq 0.5D_o$
Minimum Length of Apron, L_a, feet
Discharge, ft^3/sec.
d_{50} Riprap Size, feet
Recommended Min. d_{50}=6"
d = 12
d = 15
d = 18
d = 21
d = 24
d = 27
d = 30
d = 36
d = 42
d = 48
d = 54
d = 60
d = 66
d = 72
d = 78
d = 84
d = 90
d = 96

DETAIL 29 - ROCK OUTLET PROTECTION I

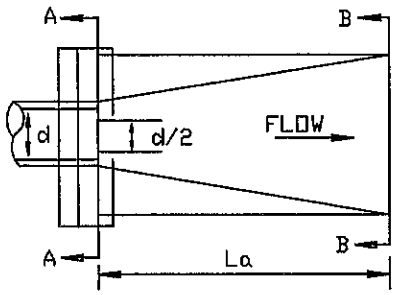

PLAN VIEW

DISCHARGE TO SEMI CONFINED SECTION (MAXIMUM TAILWATER CONDITION)

MINIMUM DEPTH = PIPE DIAMETER OR TAILWATER DEPTH, WHICHEVER IS GREATER

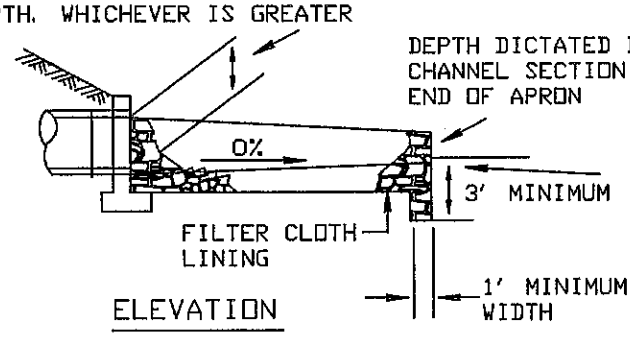

ELEVATION

NOTE: FILTER CLOTH MUST EXTEND A MINIMUM OF 6" BEYOND APRON AND SIDES

CHANNEL CROSS SECTION WILL TRANSITION FROM A-A TO B-B

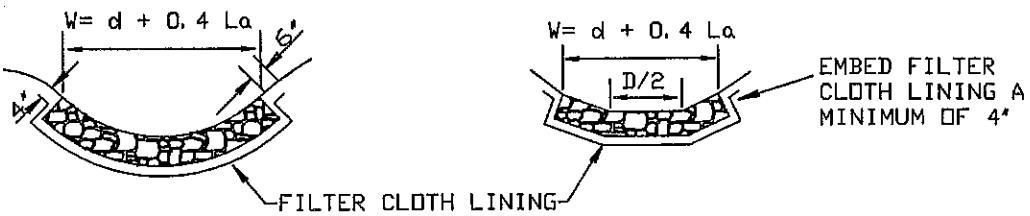

SECTION B-B

SECTION A-A

NOTE: FILTER CLOTH SHALL BE GEOTEXTILE CLASS SE

ROCK OUTLET PROTECTION I

Construction Specifications

1. The subgrade for the filter, rip-rap, or gabion shall be prepared to the required lines and grades. Any fill required in the subgrade shall be compacted to a density of approximately that of the surrounding undisturbed material.

2. The rock or gravel shall conform to the specified grading limits when installed respectively in the rip-rap or filter.

3. Geotextile class SE shall be protected from punching, cutting, or tearing. Any damage other than an occasional small hole shall be repaired by placing another piece of geotextile over the damaged part or by completely replacing the geotextile. All overlaps whether for repairs or for joining two pieces of geotextile shall be a minimum of one foot.

4. Stone for the rip-rap or gabion outlets may be placed by equipment. They shall be constructed to the full course thickness in one operation and in such a manner as to avoid displacement of underlying materials. The stone for rip-rap or gabion outlets shall be delivered and placed in a manner that will ensure that it is reasonably homogeneous with the smaller stones and spalls filling the voids between the larger stones. Rip-rap shall be placed in a manner to prevent damage to the filter blanket or geotextile. Hand placement will be required to the extent necessary to prevent damage to the permanent works.

5. The stone shall be placed so that it blends in with the existing ground. If the stone is placed too high then the flow will be forced out of the channel and scour adjacent to the stone will occur.

DETAIL 30 - ROCK OUTLET PROTECTION II

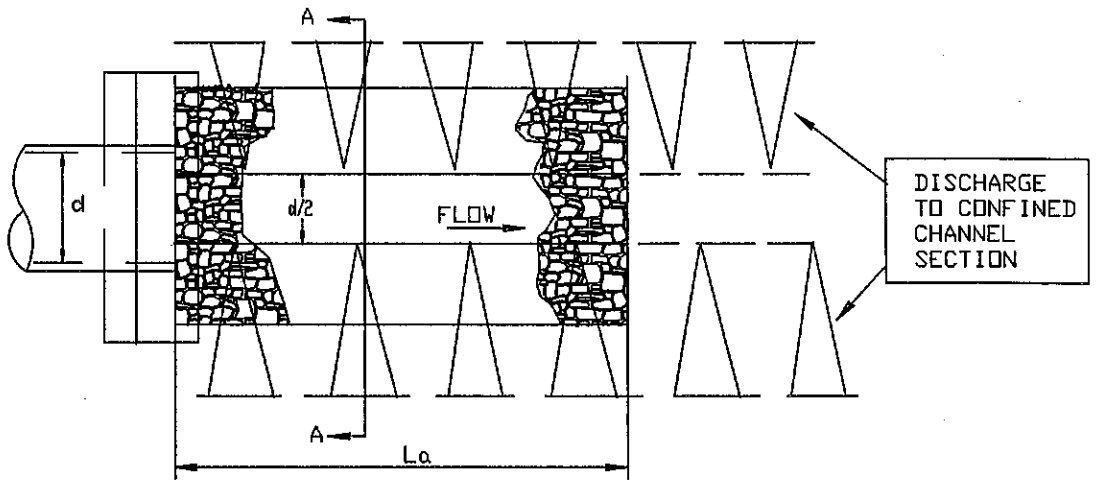

PLAN VIEW

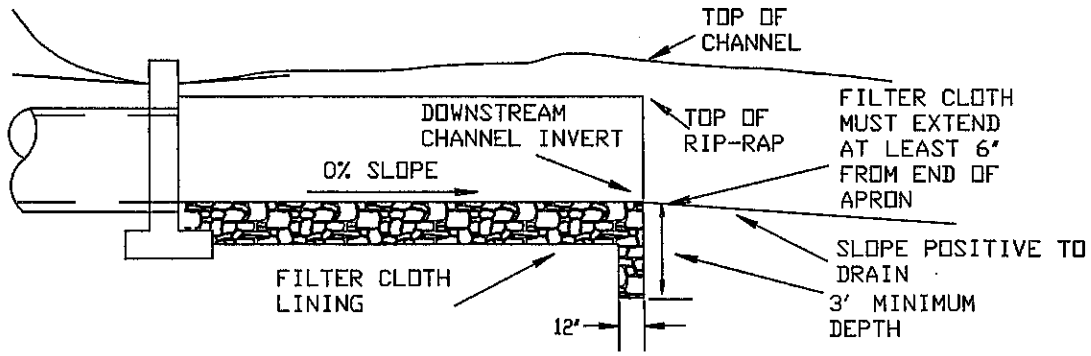

ELEVATION

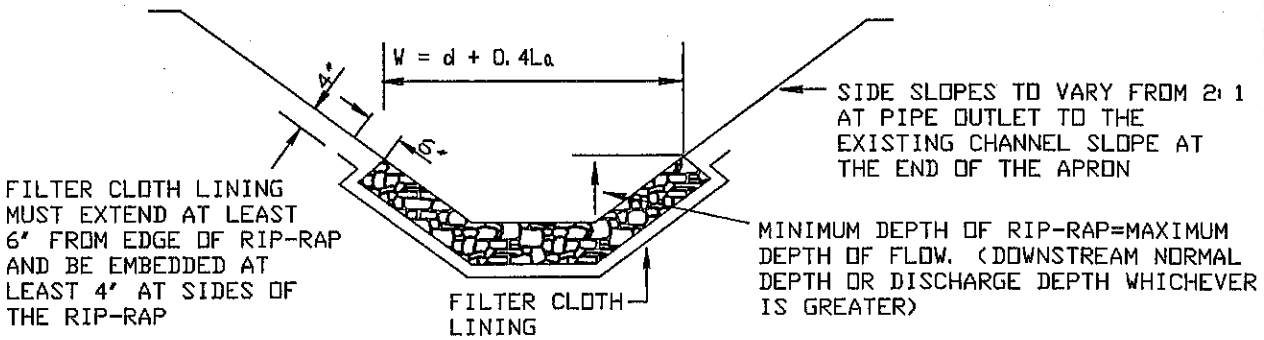

SECTION A-A

NOTE: FILTER CLOTH SHALL BE GEOTEXTILE CLASS SE

ROCK OUTLET PROTECTION II

Construction Specifications

1. The subgrade for the filter, rip-rap, or gabion shall be prepared to the required lines and grades. Any fill required in the subgrade shall be compacted to a density of approximately that of the surrounding undisturbed material.

2. The rock or gravel shall conform to the specified grading limits when installed respectively in the rip-rap or filter.

3. Geotextile class SE shall be and protected from punching, cutting, or tearing. Any damage other than an occasional small hole shall be repaired by placing another piece of geotextile over the damaged part or by completely replacing the geotextile. All overlaps whether for repairs or for joining two pieces of geotextile shall be a minimum of one foot.

4. Stone for the rip-rap or gabion outlets may be placed by equipment. They shall be constructed to the full course thickness in one operation and in such a manner as to avoid displacement of underlying materials. The stone for rip-rap or gabion outlets shall be delivered and placed in a manner that will ensure that it is reasonably homogeneous with the smaller stones and spalls filling the voids between the larger stones. Rip-rap shall be placed in a manner to prevent damage to the filter blanket or geotextile. Hand placement will be required to the extent necessary to prevent damage to the permanent works.

5. The stone shall be placed so that it blends in with the existing ground. If the stone is placed too high then the flow will be forced out of the channel and scour adjacent to the stone will occur.

DETAIL 31 - ROCK OUTLET PROTECTION III

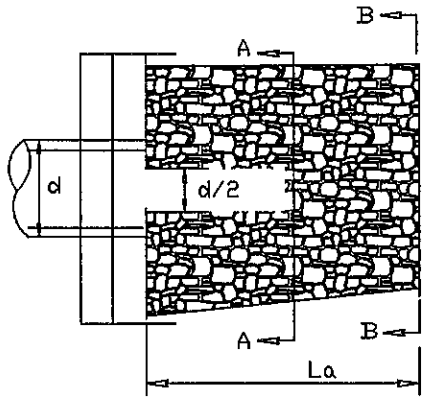

PLAN VIEW

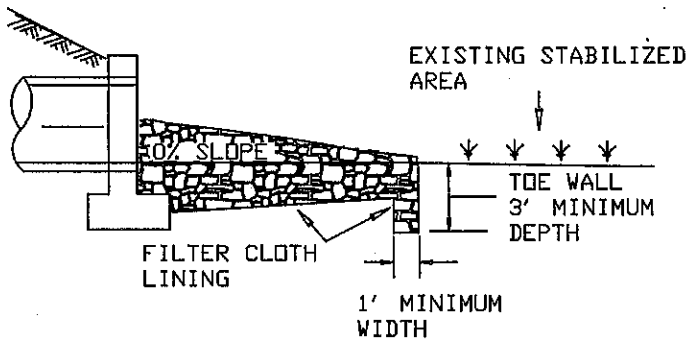

ELEVATION

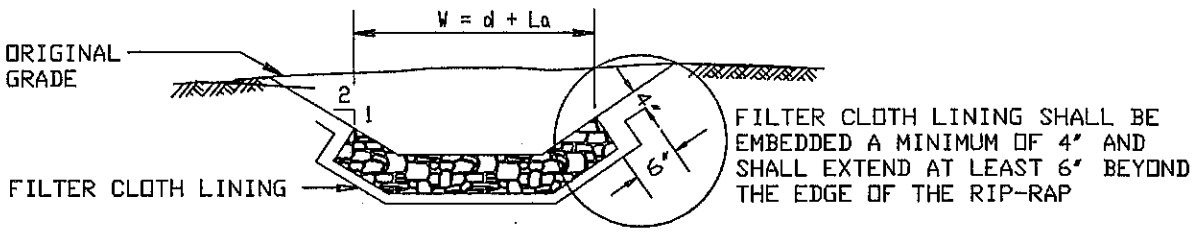

SECTION A-A

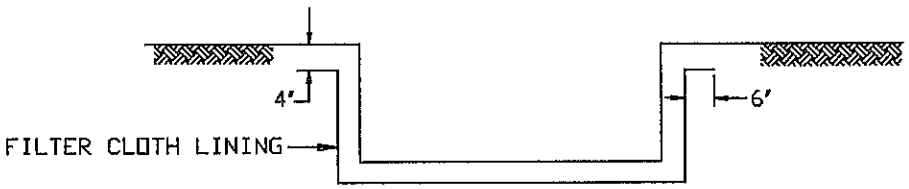

SECTION B-B

NOTE: FILTER CLOTH SHALL BE GEOTEXTILE CLASS SE

ROCK OUTLET PROTECTION III

Construction Specifications

1. The subgrade for the filter, rip-rap, or gabion shall be prepared to the required lines and grades. Any fill required in the subgrade shall be compacted to a density of approximately that of the surrounding undisturbed material.

2. The rock or gravel shall conform to the specified grading limits when installed respectively in the rip-rap or filter.

3. Geotextile class SE shall be protected from punching, cutting, or tearing. Any damage other than an occasional small hole shall be repaired by placing another piece of geotextile over the damaged part or by completely replacing the geotextile. All overlaps whether for repairs or for joining two pieces of geotextile shall be a minimum of one foot.

4. Stone for the rip-rap or gabion outlets may be placed by equipment. They shall be constructed to the full course thickness in one operation and in such a manner as to avoid displacement of underlying materials. The stone for rip-rap or gabion outlets shall be delivered and placed in a manner that will ensure that it is reasonably homogeneous with the smaller stones and spalls filling the voids between the larger stones. Rip-rap shall be placed in a manner to prevent damage to the filter blanket or geotextile. Hand placement will be required to the extent necessary to prevent damage to the permanent works.

5. The stone shall be placed so that it blends in with the existing ground. If the stone is placed too high then the flow will be forced out of the channel and scour adjacent to the stone will occur.